SEASTAR POWER ASSIST

APPLICATIONS

The SeaStar Power Assist steering unit is designed for use with SeaStar manual hydraulic steering systems and is suited for all heavy / high torque steering applications.

FEATURES

- Dramatically reduces wheel torque
- Easy to install
- Simple 'add on' to an existing SeaStar manual system (optimal performance achieved when used with SeaStar 1.4 - 2.0 pumps)
- OEM or Retro fit
- Compatible with power purge system
- Reverts to manual mode in the case of power loss
- Suitable for use with autopilots
- 12v or 24v operation
- Wall or floor mounted
- Wiring harness, and mounting bracket included
- Ignition protected (SAE J-1171)
- ABYC, CE, NMMA, ISO 10592 Approved

SeaStar Power Assist steering brings automotive-type steering comfort and control to powerboats.
The addition of a Power Assist unit will greatly reduce steering effort and enhance the boating experience for everyone.

SPECIFICATIONS

Voltage	12V or 24V (automatically recognized)
System Pressure	1000 psi MAX (1500 psi MAX Power Assist Pro)
Current Draw	40 A MAX, 60 A Peak (1 A System Electronics)

TYPICAL APPLICATIONS

150hp+ single outboards
Heavy 4 stroke outboards
Twin/Triple outboards
High performance bass boats (SeaStar Power Assist Pro)
Non counter rotating twin outboards
Inboards where rudder torque makes wheel effort heavy or uncomfortable
Designed for difficult and hard to steer boats
Suitable for all O/B, I/O, I/B powered boats, equipped with standard hydraulic steering.

Issue Date - Nov 2013
Issue Number - pas2

SEASTAR POWER ASSIST

ORDER INFORMATION

SEASTAR POWER ASSIST	PART No.
Regular Power Assist, 15’ harness	PA1200-2
Regular Power Assist, 25’ harness	PA1225-2
SEASTAR POWER ASSIST PRO	
PRO Power Assist, 15’ harness	PA1315-2

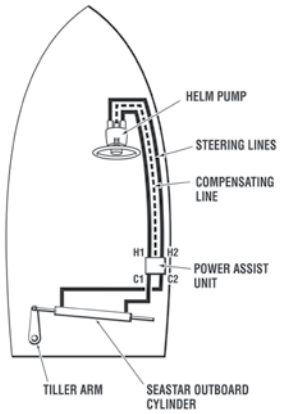

Optional Accessoeries

Seastar P/A Dual Ignition Control Kit

Part no. HA1201

The dual ignition control kit is designed to connect the power assist unit’s ignition wire to two engines allowing one engine to be turned off and retain power assist control.

Seastar P/A Harness Fuse Kit

Part no. HA1206

The harness fuse kit ensures abyc compliance the power assist unit directly to battery.

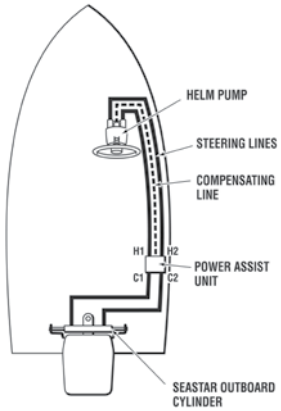

TECHNICAL DATA

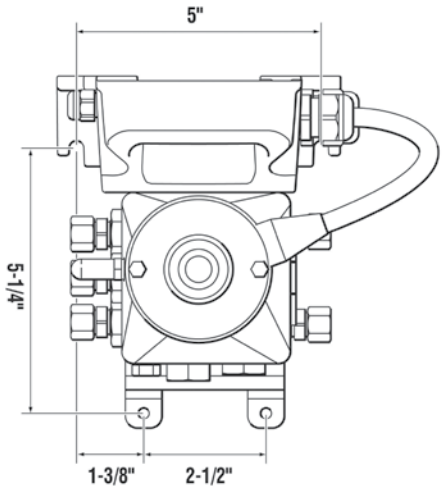

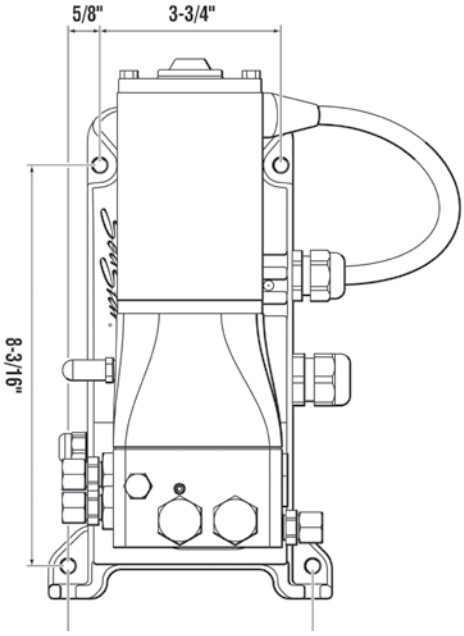

Issue Date - Nov 2013
Issue Number - pas2